Dynamic trajectory annotation for integrating environmental and movement data

Vanessa S. Brum-Bastos[1], Jed A. Long[1], Urška Demšar[1]

[1] School of Geography & Geosciences, University of St Andrews, Irvine Building, North Street, St Andrews, UK
Email: {vdsbb, jed.long, urska.demsar}@st-andrews.ac.uk

1. Introduction

Recent advances in tracking technology and remote sensing have been shifting the core of movement research. The unprecedented quantity and quality of movement data (Demšar et al. 2015) along with the increasing availability of remotely sensed products allows movement researchers to investigate the role played by the environment in the phenomenon of movement.

Movement data are collected in the form of trajectories. A trajectory, also called a space-time path (Hägerstrand 1970), is a sequence of ordered fixes with spatial and temporal coordinates, often GPS points, representing the movement of a single object (Long & Nelson 2013).

Movement behaviour is influenced by a set of complex external and internal factors which interact at diverse temporal and spatial scales (Lima & Zollner 1996; Nathan & Giuggioli 2013). Changes in environmental circumstances, such as wind, temperature and precipitation activate different movement behaviours which are reflected as movement patterns in the data; identifying and understanding these patterns is one of the challenges for movement research (McClintock et al. 2014).

Environmental triggers of movement can be analysed using trajectory annotation, a technique that links trajectories to environmental data (Demšar et al. 2015). This method adds environmental information to each GPS fix. To facilitate context-aware analysis and support understanding of how the environmental situation affects movement behaviour.

Environmental data used in trajectory annotation come from diverse sources, such as meteorological (Safi et al. 2013), weather radar (Shamoun-Baranes et al. 2004) and remote sensing data (Cagnacci et al. 2011; Coyne & Godley 2005; Dodge et al. 2013; Dodge et al. 2014). Currently, trajectory annotation is mostly done by assigning the nearest value from the environmental data in space and/or time to the fix. This is problematic because often exist differences in the temporal and spatial scales of movement and environmental data.

Context-aware analysis is challenging (Neumann et al. 2015) due to the trade-off between spatial and temporal resolutions that exist in both environmental and movement data. For example with remote sensing, finer temporal resolution implies coarser spatial resolution and vice-versa. In some cases, e.g. in GPS tracking of human mobility (Siła-Nowicka et al. 2015) and some types of animal movement, (e.g. seabird tracking, Stienen et al. 2016), the temporal resolution of environmental data is lower than the frequency with which fixes are registered in a trajectory (which can be at the level of seconds or minutes). In other cases, enviromental data are collected more frequently than trajectory points. For example, weather radar data are typically collected at 5 min intervals, which is much less than the tracking resolution of GPS data for larger animals whose movement is potentially affected by precipitation (e.g., roe deer, De Groeve et al. 2015; lynx, Gaston et al. 2016). In all cases, the spatial

resolution of environmental data is almost always coarser than the spatial accuracy from GPS tracking

In this paper we propose two new methods for integration of environmental and movement data to address the two outlined incompatibilities between the temporal resolutions of the environmental and movement data.

2. Methods

We propose two new methods for trajectory annotation to overcome the disconnection between data resolutions: 1) dynamic trajectory annotation for movement data with a higher temporal resolution than environmental data, 2) dynamic trajectory annotation with space-time prisms for movement data with a lower temporal resolution than environmental data. This is work in progress, therefore we present preliminary results for the first method and a theoretical framework for the second one.

2.1 Dynamic trajectory annotation

This method addresses the case where environmental data have a specific temporal resolution and trajectory fixes are sampled at much finer temporal resolution. In such cases, the conventional trajectory annotation takes the environmental data set and assigns the closest value in time and space to each trajectory fix, disregarding the temporal continuity of the environmental variable (e.g rainfall, temperature, humidity). Our dynamic trajectory annotation incorporates this continuity by estimating intermediate states between the two given environmental layers.

Consider two layers of the same environmental variable at t_1 and t_2 with values v_{t_1} and v_{t_2}, and a trajectory fix j at t_n, where $t_1 < t_n < t_2$ and $t_2 - t_n < t_n - t_1$. In conventional trajectory annotation the value v_1 will be assigned to the fix j, as illustrated in Figure 1a: there $v_{t_1} = grey$ at t_1 and $v_{t_n} = grey$ at t_n , because v_{t1} at t_1 is the nearest neighbour of the fix j in time. This may be misleading, since the environmental condition may have changed considerably between times t_1 and t_n . In our method, we interpolate the environmental values between t_1 and t_2 and instead of assigning fix j a grey value, we assign it an interpolated value between $v_{t_1} = grey$ and $v_{t_2} = green$, as illustrated in Figure 1b.

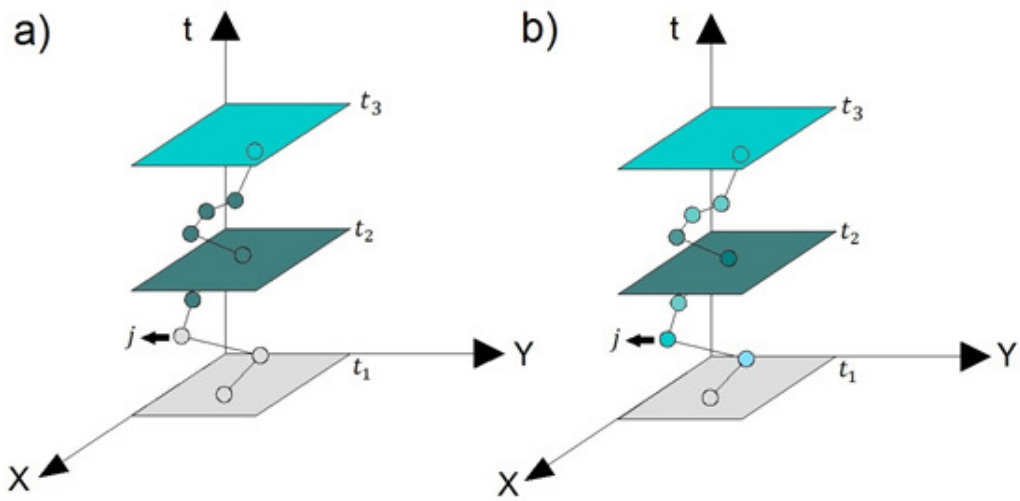

Figure 1. a) Trajectory annotation: the value assigned to j is equal to the value of the nearest neighbour in time v_{t_1} ; b) Dynamic trajectory annotation: the value assigned to j is an interpolated value between v_{t_1} and v_{t_2}.

The interpolated value can be calculated as follows: we assume that the change rate between t_1 and t_2 is linear and derive a linear function between each pair of values in time (Equation 1).

$$v_{t_n} = \left(\frac{v_{t_2} - v_{t_1}}{t_2 - t_1}\right).t_n + \left[v_{t_1} - \left(\frac{v_{t_2} - v_{t_1}}{t_2 - t_1}\right).t_1\right] \quad (1)$$

Most environmental datasets are collected at regular time intervals, which are separated by the temporal resolution Δ_t. Thus, we can say that $t_2 - t_1$ is always equal to Δ_R and also that $t_1 = 0$ for any pair of environmental variables in time. Therefore we can simplify Equation 1 into Equation 2, as follows:

$$v_{t_n} = \left(\frac{v_{t_2} - v_{t_1}}{\Delta_t}\right).t_n + v_{t_1} \quad (2)$$

2.2 Example: Human trajectories

We tested our proposed dynamic annotation against four other trajectory annotation methods on human movement data (Sila-Nowicka et al. 2014). These data consist of GPS fixes recorded at each five seconds from 91 volunteers from the town of Dunfermline, in the Kingdom of Fife, UK. Data for each individual were continuously collected over a two week period. As environmental data we used the Met Office NIMROD Rain Radar Data for United Kingdom, with 1 km spatial resolution and 5 minute temporal resolution.

We annotated each GPS fix by identifying the nearest earlier (t_1) and the nearest later (t_2) NIMROD values in time, i.e., for a GPS fix at 20:53, t_1= 20:50 and t_2 = 20:55. To estimate the rainfall value at t_n we applied 5 different interpolation methods: 1) value at previous NIMROD time ($v_{t_n} = v_{t_1}$), 2) value at next NIMROD time ($v_{t_n} = v_{t_2}$), 3) nearest neighbour (NN) (choose the nearest point between t_1 and t_2), 4) mean value ($v_{t_1} + v_{t_2}$)/2, and 5) dynamically interpolated value (as described in section 2.1). We further calculated the accumulated rain amount at each fix using the trapezoidal rule for approximating integrals. The trapezoidal rule approximates the region under a curve as a trapezoid and calculates its area.

Figure 2 illustrates the differences in five interpolation methods and rainfall accumulation curves for one trajectory between 20:53 and 21:32 on the 2 Nov 2013. Rainfall data and annotated trajectories are shown in space-time cubes, that is, volumes where the two bottom dimensions represent the geographic plane and the third dimension represents time. The trajectory is shown as a polyline in each cube and the NIMROD data are shown as horizontal layers at respective times. Rain classes were determined by a natural breaks classification. The different interpolation methods generated distinct annotated trajectories: in Figure 2a and 2b the main changes in the rain values occur where a fix intersects the rainfall raster layer, while in Figure 2c these changes occur mainly half way between t_1 and t_2, and in Figure 2d and 2e these changes are smoother and are not restricted to the intersection points.

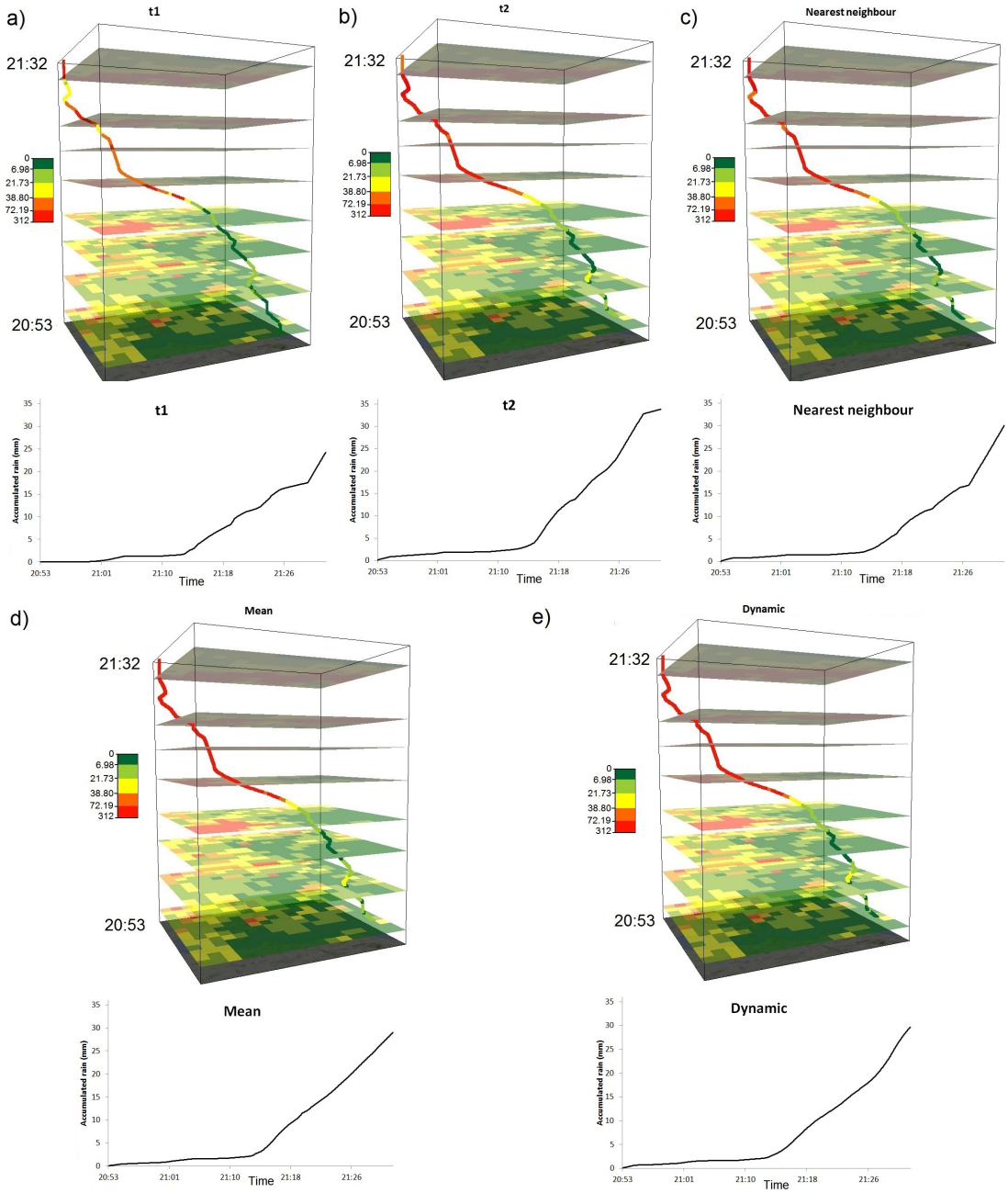

Figure 2. Five interpolation methods and corresponding rainfall accumulation curves for one trajectory. The trajectory is shown in space-time cubes with rainfall raster layers displayed at corresponding times. Interpolation methods are a) $v_{t_n} = v_{t_1}$; b) $v_{t_n} = v_{t_2}$; c) nearest neighbour; d) mean; e) dynamic annotation. The colour scale refers to the instantaneous rainfall value for a fix and/or a rainfall layer in mm/h.

Even though this trajectory is only thirty nine minutes in duration, it is also possible to see differences between the accumulation curves. The accumulation curve for the dynamic interpolation (Figure 2e) is the closest to a continuous growth curve, which is what would be expected in reality when moving through rain. Additionally, the accumulation curve for dynamic interpolation (Figure 2e) can be separated into three sections with different inclinations, which correspond to moving through precipitation of different strengths and accumulating rainfall at three different but consistent

accumulation rates. These sections are not as easily identifiable in accumulation charts of the other interpolation methods.

This is work in progress and we are currently awaiting ground truth data (accumulated precipitation) from the Met Office, to validate our methodology. In the mean time we calculated the ratios between the total accumulated values of the 5 methods for this trajectory (Table 1) to see if the other methods over or underestimated the rainfall amount, compared to our dynamic annotation. The results indicate that $v_{t_n} = v_{t_1}$ and the mean methods underestimate accumulated rainfall and the others overestimate the rain value (see Table 1 shaded column), with NN interpolation producing the closest value to dynamic interpolation (as would be expected).

Table 1. Ratios between final accumulated values for different interpolation methods

	t_1	t_2	Dynamic	Mean	NN
t_1	1.00	0.72	0.82	0.83	0.80
t_2	1.40	1.00	1.14	1.17	1.12
Dynamic	1.22	0.88	1.00	1.02	0.99
Mean	1.20	0.86	0.98	1.00	0.96
NN	1.24	0.89	1.01	1.04	1.00

2.3 Dynamic trajectory annotation with space-time prisms

To address the problem when environmental data are sampled at a higher rate than trajectory data, we propose to extend the concept of the dynamic trajectory annotation taking into account all the potential paths between each pair of trajectory points. We propose to do this by interpolating the environmental data within an accessibility volume – the space-time prism.

A space-time prism (STP) is a geometric volume in a space-time cube that delimits the time-space surrounding two subsequent fixes; its base radius is dependent on the ability of the moving unit to move (Hägerstrand 1970). The STP delineates the possible set of locations that a moving object could have travelled through within a finite time interval, defined by known start and end locations (Miller 1991).

The STP is built as follows, consider two trajectory's fixes j and m at t_0 and t_1 (Figure 3a) with velocity u_{t_n}. From this, we can define the maximum motion circle (MMC) for each fix. This circle is centred on the spatial coordinates of the fix and its radius is given by Equation 3.

$$r_n = u_{t_n}.(t_1 - t_0) \tag{3}$$

Both MMCs are then extruded vertically up or down to the time coordinate $t_0 + (\frac{t_1 - t_0}{2})$ (Figure 3a). The intersection between the two MMCs (the shaded "pointed ellipse"-like area in Figure 3a) is the plane of the space-time prism. The STP is then a union of two opposing cone-like structures, which are built by assigning the fixes j and m to become the apex of the two cones (Figure 3b). The STP volume generated by this procedure represents the accessibility volume within the space-time cube: that is, given the locations of trajectory fixes and the velocity of movement between the two fixes, the moving object could only have moved within the STP. We propose to use the STP in dynamic trajectory interpolation when movement data are represented with a coarser temporal resolution than some environmental data. In this case, the environmental

layers L_1 and L_2 will be intersected by the STP (Figure 3c) creating a set of layers within the STP with environmental information (Figure 3d).

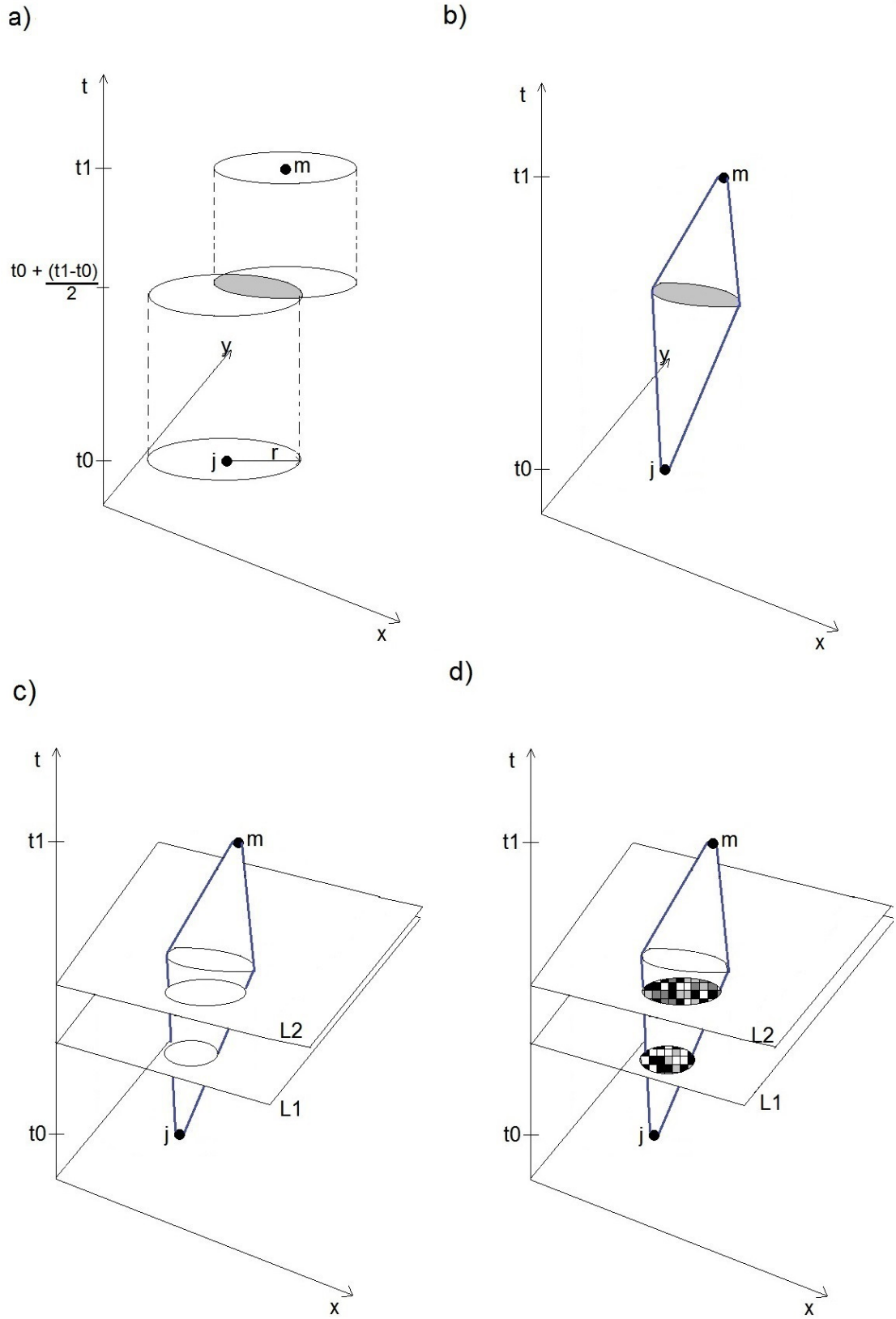

Figure 3. Space time prism intersecting environmental layers (L1 and L2) between two fixes (j and m)

Dynamic trajectory annotation will then be applied between each pair of layers to create a volume of environmental data within the STP. The environmental value with which the GPS fixes will be annotated will be calculated by integrating the environmental variable across this volume and normalising with the size of the volume in order to provide an approximation for the environmental value that takes into consideration any possible locations between the two fixes. We are currently working on implementation of this procedure.

3. Conclusions

In this paper we propose two new methods for trajectory annotation with environmental data that address the problem of incompatible temporal resolutions between the two data types. We proposed the dynamic trajectory annotation to address the case when trajectory sampling is at a much higher rate than temporal resolution of environmental data and the dynamic trajectory annotation with space-time prisms to address the opposite problem. Preliminary results for the dynamic trajectory annotation indicate that it can be useful to identify environmental conditions related to dispersion and other activity modes for animals and humans. As this is work in progress, we continue testing and implementing our methods. In future work we also consider solution for cases where multiple types of environmental data need to be included, for example, remotely sensed data on the same environmental variable acquired by different satellites with different spatial and temporal resolutions.

Acknowledgements

The authors would like to acknowledge SWB (Science Without Borders) - CAPES (Coordination for the Improvement of Higher Education Personnel) for the financial support during the development of this study, through first author's PhD scholarship.

References

Cagnacci F et al., 2011. Partial migration in roe deer: migratory and resident tactics are end points of a behavioural gradient determined by ecological factors. *Oikos*, 120(12), pp.1790–1802.

Coyne MS and Godley BJ, 2005. Satellite Tracking and Analysis Tool (STAT): an integrated system for archiving , analyzing and mapping animal tracking data. *Marine ecology progress series*, 301(Argos 1996), pp.1–7.

Demšar U et al., 2015. Analysis and visualisation of movement: an interdisciplinary review. *Movement Ecology*, 3(1).

Dodge S et al., 2014. Environmental drivers of variability in the movement ecology of turkey vultures (Cathartes aura) in North and South America. *Philosophical transactions of the Royal Society of London. Series B, Biological sciences*, 369:20130195.

Dodge S et al., 2013. The environmental-data automated track annotation (Env-DATA) system: linking animal tracks with environmental data. *Movement Ecology*, 1(1), pp.2-14.

Gaston A, Blazquez-Cabrera, Garrote G, Mateo-Sanches MC, Beier P, Simon MA and Saura S, 2016, Response to agriculture by a woodland species depends on cover type and behavioural state: insights from resident and dispersing Iberian lynx. *Journal of Applied Ecology* (Advanced Online Publication).

Hägerstrand T, 1970. What about people in regional science?. *Papers of the Regional Science Association* 24 (1), pp. 6–21.

Lima SL and Zollner PA, 1996. Towards a behavioral ecology of ecological landscapes. *Trends in Ecology and Evolution*, 11(3), pp.131–135.

Long J. and Nelson T, 2013. A review of quantitative methods for movement data. *International Journal of Geographical Information Science*, (July), pp.1–27.

McClintock BT et al., 2014. When to be discrete: the importance of time formulation in understanding animal movement. *Movement Ecology*, 2(1), pp.2-21.

Miller HJ, 1991. Modelling accessibility using space-time prism concepts within geographical information systems. *International journal of geographical information systems*, 5(3), pp.287–301.

Nathan R and Giuggioli L, 2013. A milestone for movement ecology research. *Movement Ecology*, 1(1), pp.1-3.

Neumann W et al., 2015. Opportunities for the application of advanced remotely-sensed data in ecological studies of terrestrial animal movement. *Movement Ecology*, 3(1), pp.1–13.

Safi K. et al., 2013. Flying with the wind: scale dependency of speed and direction measurements in modelling wind support in avian flight. *Movement Ecology*, 1(1), pp. 1-13.

Shamoun-Baranes J et al., 2004. Influence of meteorological conditions on flight altitudes of birds. In *16th Biometeorology and Aerobiology*. Vancouver, pp. 96–98.

Siła-Nowicka K, Vandrol J, Oshan T, Long J, Demšar U and Fotheringham S, 2015, Analysis of Human Mobility from Volunteered Movement Data and Contextual Information. International Journal of Geographic Information Science, Advanced Online Publication.

Stienen E et al. 2016, GPS tracking data of Lesser Black-backed Gulls and Herring Gulls breeding at the southern North Sea coast, ZooKeys 555: 115-124